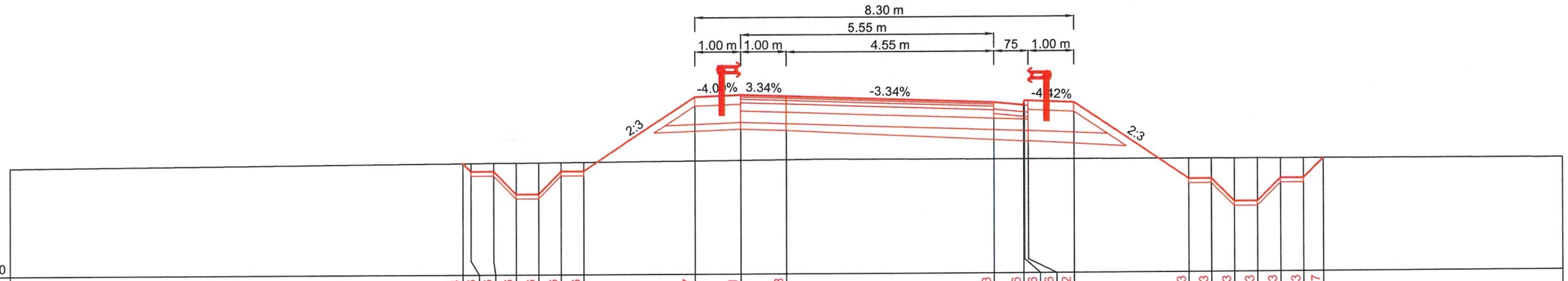

COTE PROIECT		92.44	92.26	92.26	91.76	91.76	92.26	92.26	93.87	93.91	93.88	93.73	93.66	93.76	93.76	93.72	92.03	92.03	91.53	91.53	92.03	92.03	92.47	
COTE TEREN	92.36	92.44	92.44	92.44	92.44	92.45	92.45	92.46	92.48	92.49	92.50	92.49	92.49	92.49	92.49	92.48	92.48	92.47	92.47	92.47	92.47	92.47	92.47	92.45
DISTANTE	-17.00	-7.10	-6.92	-6.42	-5.92	-5.42	-4.92	-4.42	-2.00	-1.00	0.00	4.55	5.20	5.22	5.30	6.30	8.83	9.33	9.83	10.33	10.83	11.33	11.76	17.00

KM = 220.00

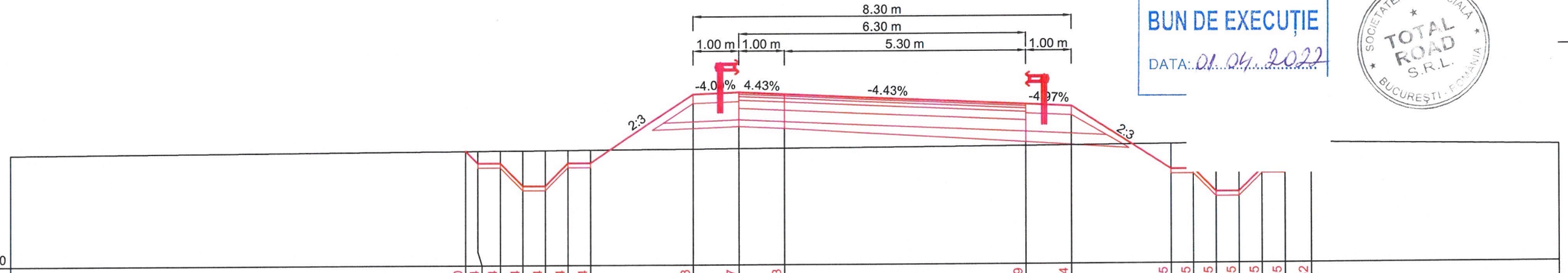

COTE PROIECT		92.50	92.24	92.24	91.74	91.74	92.24	92.24	93.73	93.77	93.73	93.49	93.44	92.05	92.05	91.55	91.55	92.05	92.05	92.62				
COTE TEREN	92.44	92.50	92.51	92.51	92.51	92.52	92.52	92.52	92.54	92.54	92.55	92.59	92.59	92.61	92.61	92.62	92.62	92.62	92.63	92.62				92.55
DISTANTE	-17.00	-7.01	-6.74	-6.24	-5.74	-5.24	-4.74	-4.24	-2.00	-1.00	0.00	5.30	6.30	8.49	8.99	9.49	9.99	10.49	10.99	11.56				17.00

KM = 200.00

SUPERVIZOR
D.R.D.P. TIMIŞOARA
BUN DE EXECUȚIE
DATA: 01.04.2022

SOCIETATEA COMERCIALĂ TOTAL ROAD S.R.L. BUCUREŞTI - ROMÂNIA

BENEFICIAR:	ANTREPRENOR:	TITLU PROIECT	SPECIFICATIE	NUME	SEMNATURA	DATA	TITLU PLANSA:	Revizie
COMPANIA NATIONALA DE ADMINISTRAREA INFRASTRUCTURII RUTIERE S.A. (C.N.A.I.R. S.A.)	TODINI CONSTRUZIONI GENERALI S.p.A.	PROIECTARE SI EXECUȚIE „DRUM DE LEGĂTURĂ AUTOSTRADA A1 ARAD - TIMIȘOARA - DN 69"	DESENAT	Teh. Sorin VASILACHE		Martie 2022	LUCRARI DE INFRASTRUCTURA RUTIERA	NR. / DATA / DESCRIERE
		FAZA PROIECT: PROIECT TEHNIC DE EXECUTIE (P.T.E.)	PROIECTAT	Ing. Mihai COROIAN		MĂRIMEA: A3	PROFILURI TRANSVERSALE CURENTE NOD DN69 - BRETEA 2	0 / 08.2021 / Emitere P.T.E.
		CONTRACT NR.: 92/7703/01.02.2021	SEF PROIECT	Ing. Catalin GRUIANU		SCARĂ: 1:100	NUMAR PLANSA: PTC - 344	1 / 09.2021 / Conf. nr.290/DLA1-224
		PROIECT NR.: 08/2021	VERIFICAT	Ing. Adrian NISTOR			PICHET: -	2 / 02.2022 / Conf. ASR 92/93833
								PAGE 1 / 1